PRI 58A
PRI 58B

Optic Rotary Incremental Encoder

- 58 mm case diameter
- 100 - 200 - 360 - 400 - 500 - 600- 720 - 1000 - 1024
  1800 - 2000 - 2048 - 2500 - 3600 - 4000 - 4096 - 5000 ppr.
- Push-Pull, TTL Linedriver and HTL Linedriver outputs
- Shaft diameter 6 - 8 - 10 mm
- 3500 rpm max.

PRI A
Clamping flange

PRI B
Synchro flange

Technical Specifications

Resolution	100 to 5000 ppr.
Output Channels	A,B,Z or A,$\overline{A}$, B,$\overline{B}$, Z,$\overline{Z}$
Output Type	Push-Pull, TTL Linedriver, HTL Linedriver
Supply Voltage	5 VDC or 8 - 24 VDC or 5 - 24 VDC
Power Comsumption (without load)	< 40 mA (24 VDC)
Cable	2.5m (standard) 5 wire + Shield (Push-Pull) 2.5m (standard) 8 wire + Shield (Linedriver)
Max. Permissible Shaft Loading Radial Axial	60 N 40 N
Max. Speed	3500 rpm
Shaft Diameter	Ø6 - 8 - 10 mm
Shaft Material	Stainless steel
Case Diameter	Ø58 mm
Case Material	Aluminium and painted steel
IP Degree	IP 54
Operating Temperature	-20°C ... +80°C
Storage Temperature	-30°C ... +90°C

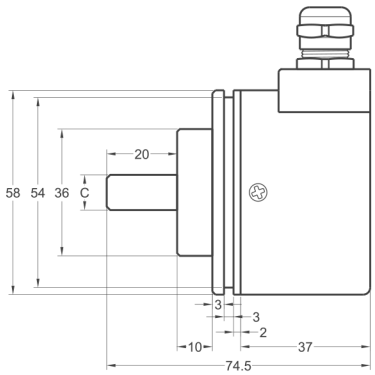

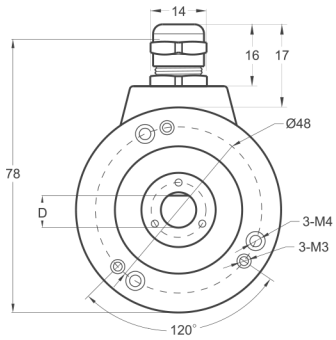

A Type (Clamping flange)

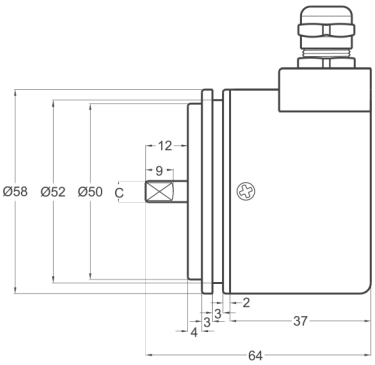

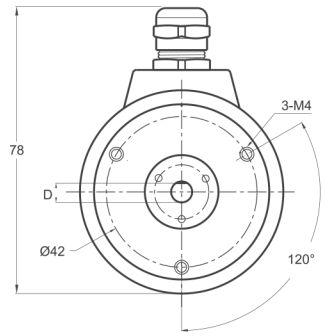

B Type (Synchro flange)

Push-Pull Cable Output

+V : Brown
0V : White
GND : Shield
Ch A : Yellow
Ch B : Green
Ch Z : Gray

TTL - HTL Linedriver Cable Output

+V : Brown
0V : White
GND : Shield
Ch A : Yellow
Ch B : Green
Ch Z : Gray
Ch A inv. : Blue
Ch B inv. : Red
Ch Z inv. : Ping

	AR (shaft)		BR (shaft)	
	C	D	C	D
PRI 58	Ø6 mm	5 mm	Ø6 mm	5 mm
	Ø8 mm	7 mm	Ø8 mm	7 mm
	Ø10 mm	9 mm	Ø10 mm	9 mm

Model	Case Diameter	Case Type	Shaft Diameter	Output Type	Resolution	Output Channels	Supply Voltage	Connector / Cable	Cable Output
(example) PRI	58	A	R8	HLD	1024	Z	V2	2M5	R
PRI	58mm	A: Clamping flange B: Synchro flange	R6 : 6mm R8 : 8mm R10: 10mm	LTP : Push-Pull LD : TTL Linedriver HLD: HTL Linedriver	100 ... 5000 ppr.	Z: A,B,Z B: A,B	V1: 5 VDC V2: 8-24 VDC V3: 5-24 VDC	2M5: 2,5 meter cable 5M : 5 meter cable 8M : 8 meter cable 10M: 10 meter cable C12: 12 pin connector	R: Radial