ZDH-DC20190509001

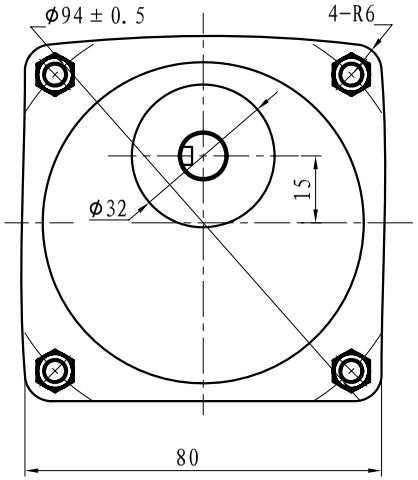

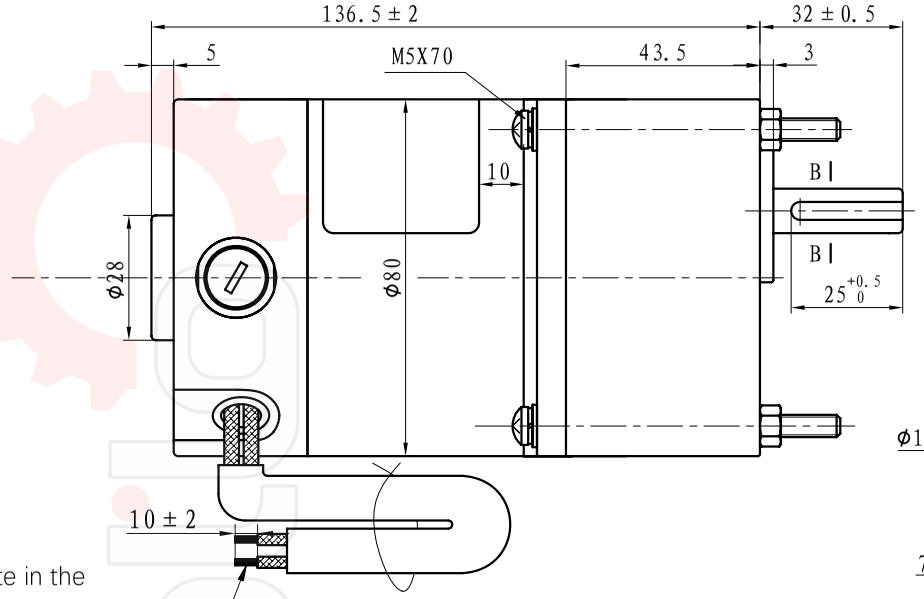

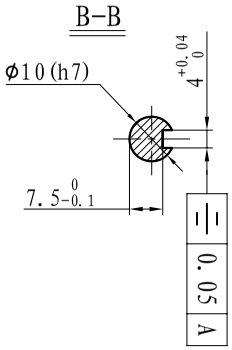

Lead length: 300mm 10, model UL1015 16AWG

Technical requirements:
1. Basic parameters of the motor are as the data of nameplate in the drawing (the date is determined by the delivery time);
2. The red lead wire is connected to the black lead wire and the black lead wire is connected to the negative.
3. Lead wire length: 300mm 10, model: UL1015 specification: 16AWG;
4. Paste the nameplate as shown in the figure, 10mm away from the front end cover;

nameplate

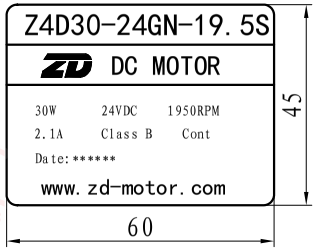

Reducer nameplate

Motor basic performance parameters table

model	Z4D30-24GN-19.5S	Reducer model	4GN200K
Rated voltage	24VDC	Slow progression	4
Rated power	30W	Direction of rotation of gearbox output shaft and motor shaft	same
Rated current	2.7A ± 10%	Gear box rated torque	8N.m
Rated speed	1950rpm ± 10%	Bearing type	Rolling bearing
Rated torque	0.14N.m	Gearbox construction	one-piece
No-load current	≤1.4A	Transmission efficiency	66%
No-load speed	2500rpm ± 10%	noise	<60dB(A) (L=40cm)
week	Cont	Motor wiring diagram	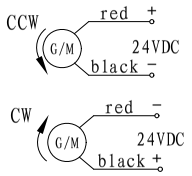
Insulation resistance	>20MΩ		
Brush life	2000h (External brush can be replaced)		
Dielectric strength	660V/S		
Insulation class	B		
Protection grade	IP20		
Service ambient temperature	-10℃ ~ +40℃		

借(通)用件登记	
旧底图总号	
底图总号	
签 字	
日 期	

标记	处数	分区	更改文件号	签 字	年、月、日
设 计			标准化		
校 对					
审 核					
工 艺			批准		

阶段标记	重量	比例
S		FULL
共 1 张	第 1 张	

宁波中大力德智能传动股份有限公司

产品型号	Z4D30-24GN-19.5S/4GN200K
整机外形图	
零件编号	ZDH-DC20190509001
客户名称	